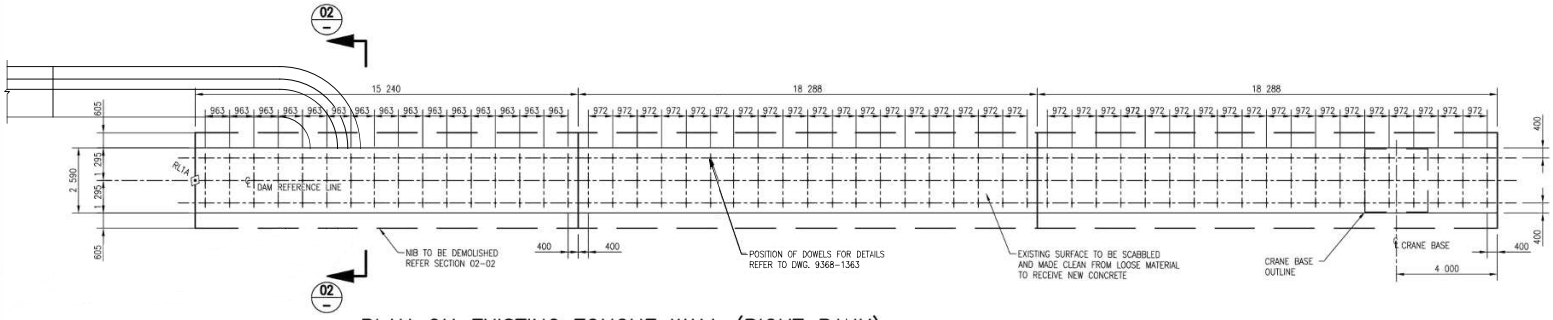

PLAN ON EXISTING TONGUE WALL (RIGHT BANK)

SCALE 1:100

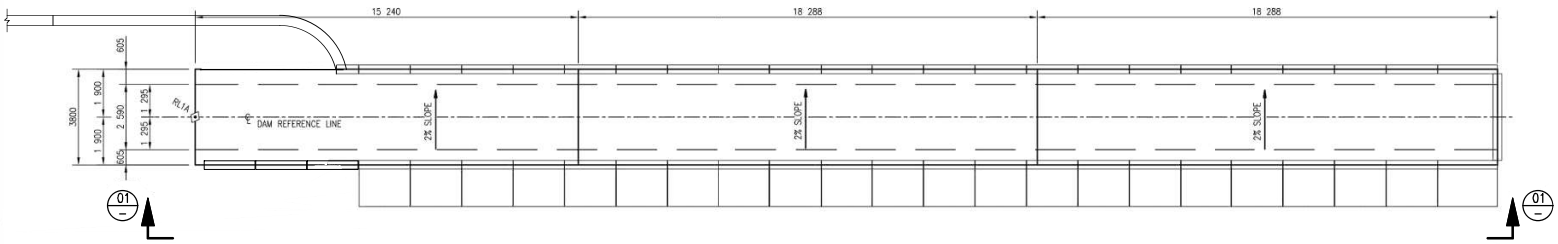

PLAN ON NEW TONGUE WALL (RIGHT BANK)

SCALE 1:100

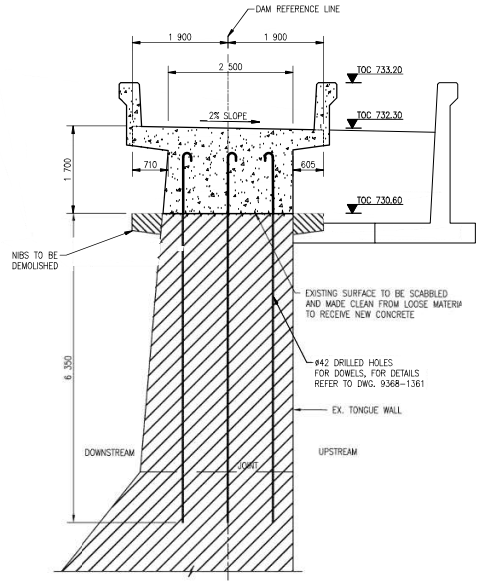

SECTION 02–02

SCALE 1:50

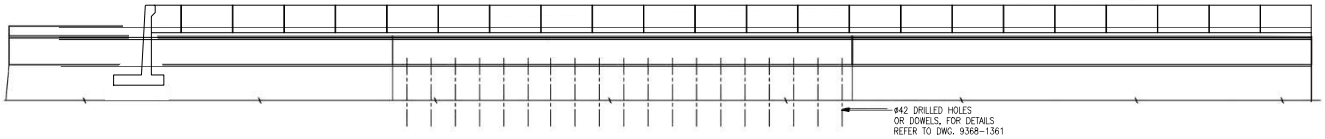

ELEVATION 01–01

SHOWING BALLUSTRADE

SCALE 1:100

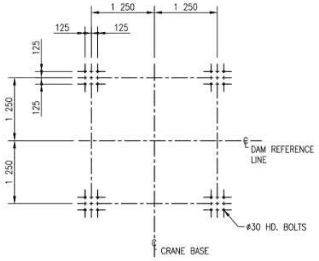

CRANE H.D. BOLT LAYOUT

SCALE 1:50

SECTION

07 / 3 — SECTION NUMBER / SHEET NUMBER

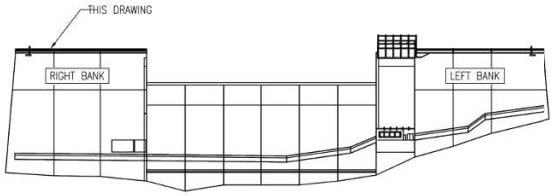

KEY PLAN DOWNSTREAM VIEW

SCALE 1:1000

SCALE 1:50 — 0 0.5 1 1.5 2 2.5 5 10 m

SCALE 1:100 — 0 1 2 3 4 5 10 20 m

SCALE 1:1 000 — 0 25 50 75 100 200 m

NOTE :

1. REFER TO DRG. No. **9368–322** FOR DETAILS OF THE CONNECTION AND EXTENTION OF WATERBAR IN THE OUTER FACES OF THE JOINTS BETWEEN VARIOUS MONOLITHS.

SHEET	DESCRIPTION	OTHER No.	REG. No.
3/3	TONGUE WALL CONC. – BALLUSTRADE DETAILS	9368–363	X
2/3	TONGUE WALL CONC. – LEFT BANK	9368–362	X
1/1	LIST OF DRAWINGS	9368–015	X

LIST OF DRAWINGS

PREPARED BY: ARQ CONSULTING ENGINEERS

REVISION				
MOD No.	DATE	DESCRIPTION	FOR	DWG
00	12/22	ISSUE FOR TENDER	QS	

DEPARTMENT OF WATER AND SANITATION
REPUBLIC OF SOUTH AFRICA

HEAD OFFICE
ENGINEERING SERVICES
PRIVATE BAG X313
PRETORIA 0001

SEDIBENG BUILDING
185 FRANCIS BAARD STREET
PRETORIA
(012) 336–7500

D.M. MASHITISHO
DIRECTOR GENERAL

M BLAESER — CHECKED: — DATE:
HJ WRIGHT — ENGINEER: — DATE:
Q SHAW — CHIEF ENGINEER / APP (Pr. Eng): — DATE:

DESIGN: HJ WRIGHT
DRAWN: TJVR
EXT. APPROVAL / DESIGN CHECKED: — DATE:
DIRECTOR (Pr. Eng): — DATE:

GROOT LETABA RIVER WATER DEVELOPMENT PROJECT (GLeWaP)

TZANEEN DAM RAISING

TONGUE WALL

RIGHT BANK – CONCRETE LAYOUTS, ELEVATIONS AND SECTIONS

PROVINCE: LIMPOPO	DISTRICT: TZANEEN	KEYCODES: – – – – –	OTHER NUMBER	9368–361	
LOCALITY No.: –	TENDER/ CONTRACT No. –	SHEET 1 OF 3	REG. No. X		REV. 00
CALCULATION FILE: –					

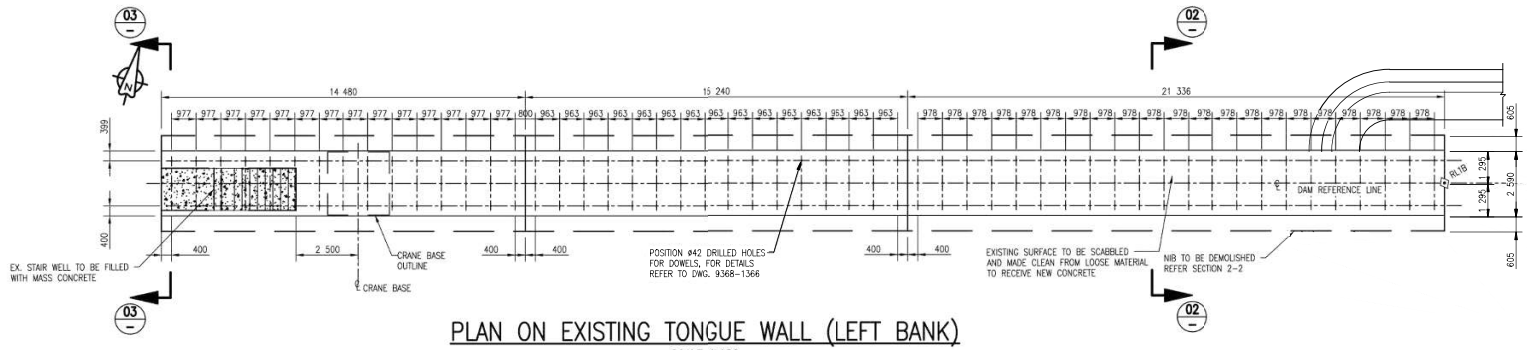

PLAN ON EXISTING TONGUE WALL (LEFT BANK)

SCALE 1:100

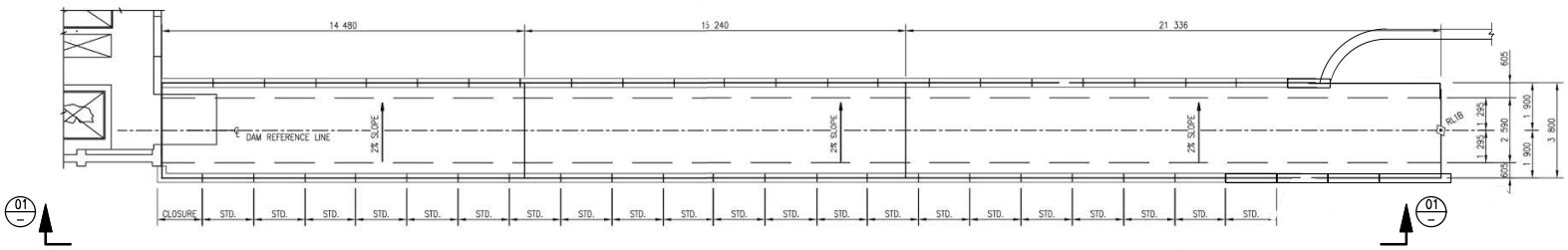

PLAN ON NEW TONGUE WALL (LEFT BANK)

SCALE 1:100

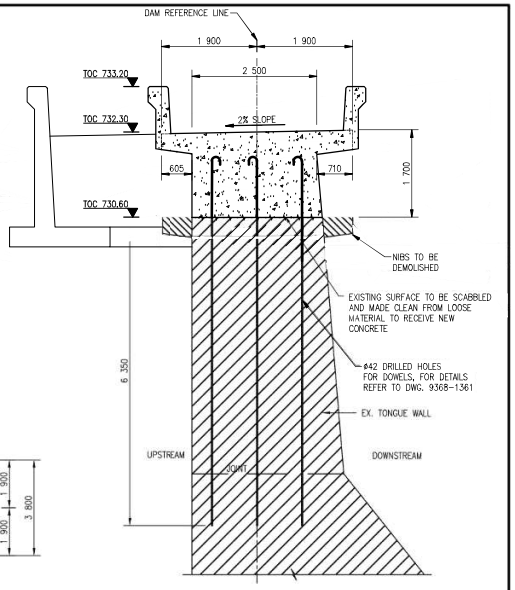

SECTION 02-02

SCALE 1:50

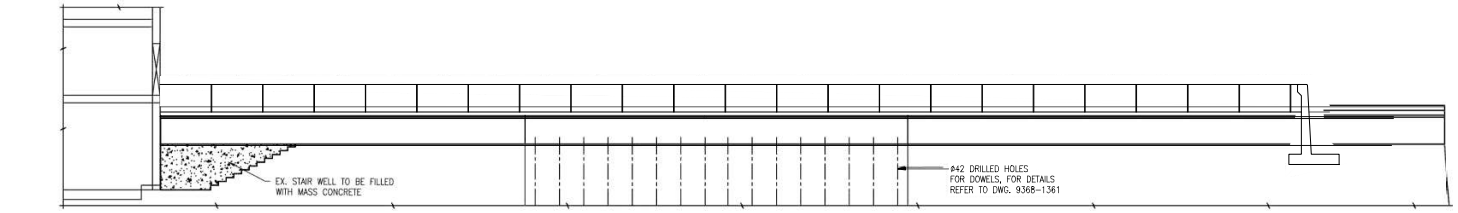

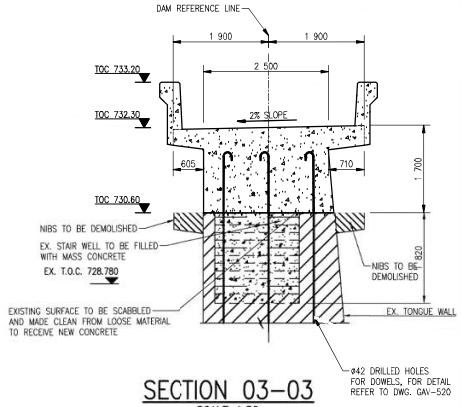

SECTION 03-03

SCALE 1:50

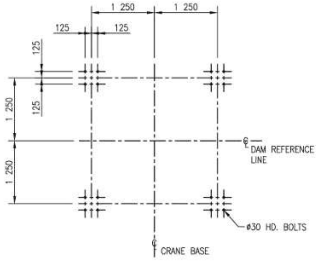

CRANE H.D. BOLT LAYOUT

SCALE 1:50

SECTION

07 / 3 — SECTION NUMBER / SHEET NUMBER

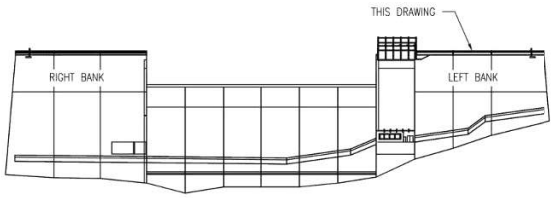

KEY PLAN DOWNSTREAM VIEW

SCALE 1:1000

SCALE 1:50 — 0 0.5 1 1.5 2 2.5 5 10 m

SCALE 1:100 — 0 1 2 3 4 5 10 20 m

SCALE 1:1 000 — 0 25 50 75 100 200 m

NOTE :

1. REFER TO DRG. No. **9368-322** FOR DETAILS OF THE CONNECTION AND EXTENTION OF WATERBAR IN THE OUTER FACES OF THE JOINTS BETWEEN VARIOUS MONOLITHS.

SHEET	DESCRIPTION	OTHER No.	REG. No.
3/3	TONGUE WALL CONC. - BALLUSTRADE DETAILS	9368-363	X
1/3	TONGUE WALL CONC. - RIGHT BANK	9368-361	X
1/1	LIST OF DRAWINGS	9368-015	X

LIST OF DRAWINGS

PREPARED BY: ARQ CONSULTING ENGINEERS

REVISION				
MOD No.	DATE	DESCRIPTION	FOR	DWS
00	12/22	ISSUE FOR TENDER	QS	

DEPARTMENT OF WATER AND SANITATION
REPUBLIC OF SOUTH AFRICA
HEAD OFFICE
ENGINEERING SERVICES
PRIVATE BAG X313
PRETORIA 0001
SEDIBENG BUILDING
185 FRANCIS BAARD STREET
PRETORIA
(012) 336-7500
D.M. MASHITISHO
DIRECTOR GENERAL

M BLAESER — CHECKED: — DATE:
HJ WRIGHT — ENGINEER: — DATE:
Q SHAW — CHIEF ENGINEER / APP (Pr. Eng): — DATE:
DESIGN: HJ WRIGHT
DRAWN: TJVR
EXT. APPROVAL / DESIGN CHECKED: — DATE:
DIRECTOR (Pr. Eng): — DATE:

GROOT LETABA RIVER WATER DEVELOPMENT PROJECT (GLeWaP)

TZANEEN DAM RAISING

TONGUE WALL

LEFT BANK - CONCRETE LAYOUTS, ELEVATIONS AND SECTIONS

PROVINCE: LIMPOPO	DISTRICT: TZANEEN	KEYCODES:	– – – – –	OTHER NUMBER	9368-362
LOCALITY No.: –	TENDER/ CONTRACT No. –	SHEET	REG. No.		REV.
CALCULATION FILE: –		2 OF 3	X		00